WWW.BULLBBQ.COM

SPEC SHEET
REVERSED
GOURMET Q ISLAND

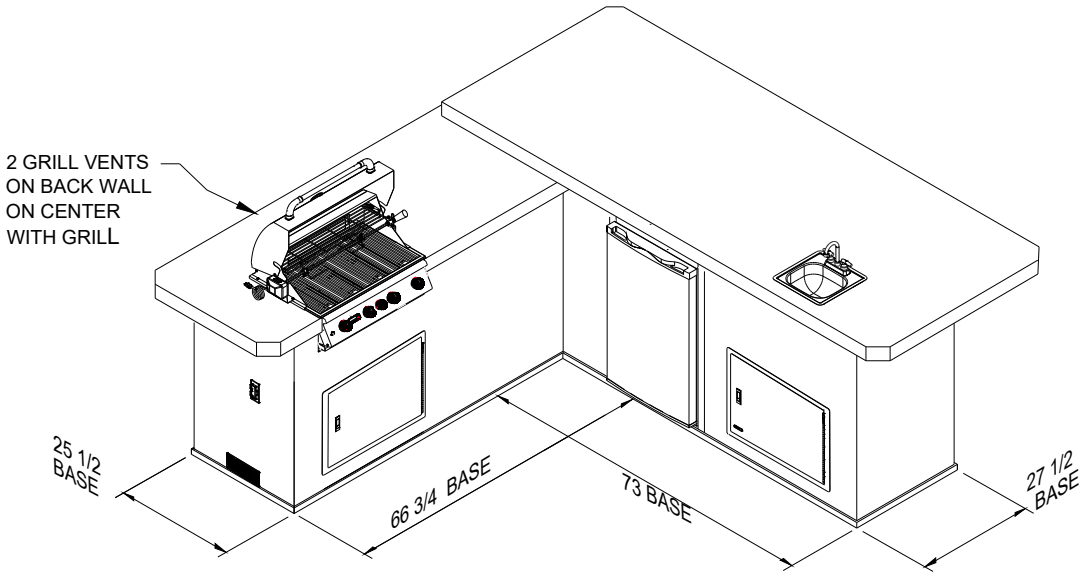

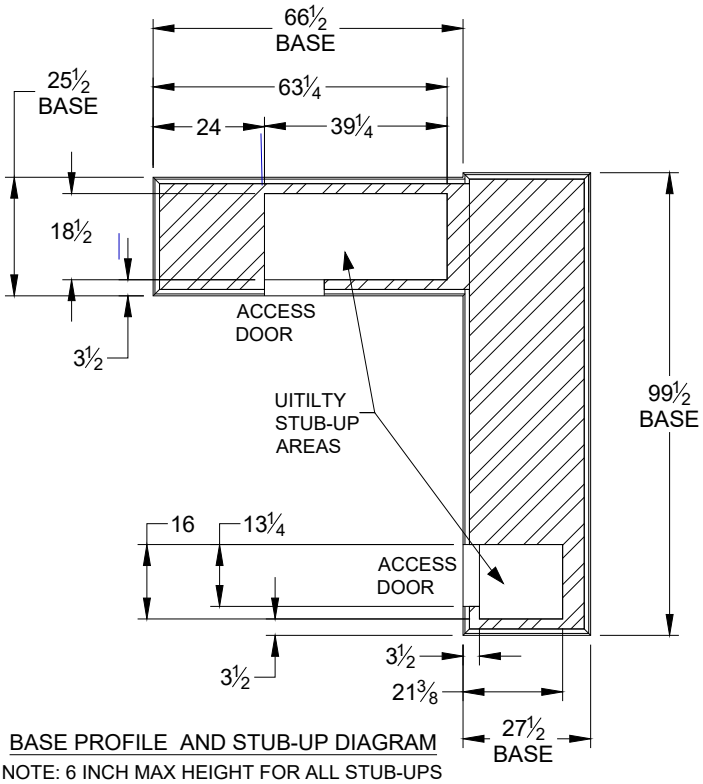

BASE PROFILE AND STUB-UP DIAGRAM

NOTE: 6 INCH MAX HEIGHT FOR ALL STUB-UPS

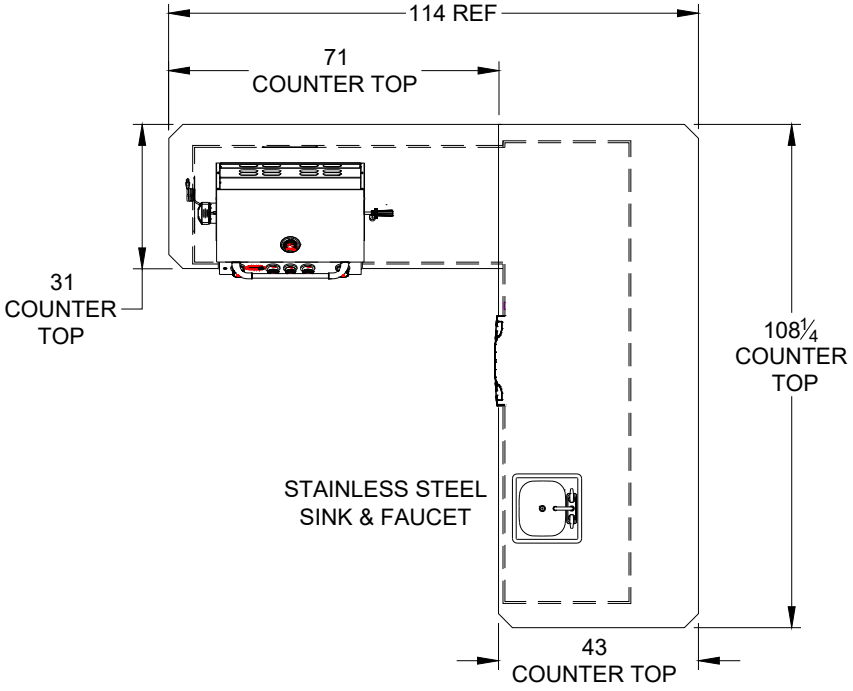

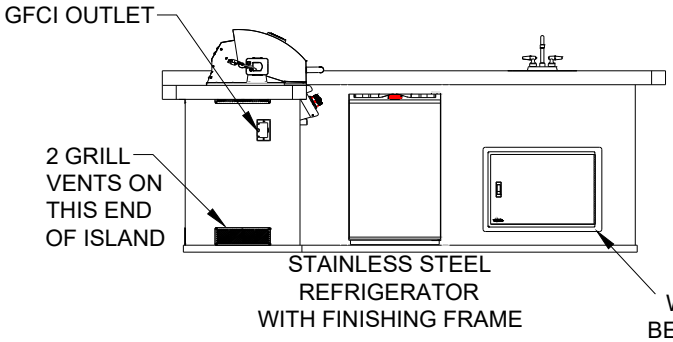

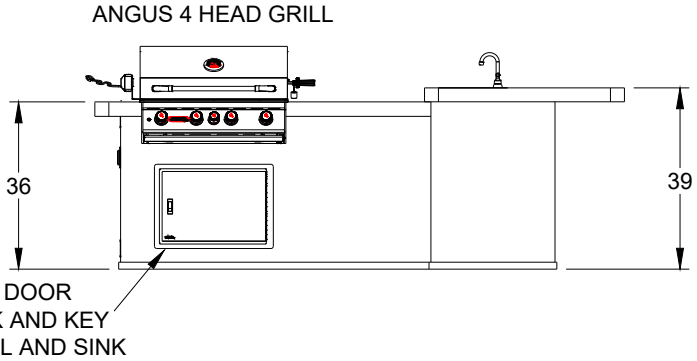

NOTES:

1. ALL DIMENSIONS ARE IN INCHES.
2. FOR ROCK FINISHES ADD 1 1/2 INCHES TO BASE DIMENSIONS.